YOUNG INTERNATIONAL

FREIGHT FORWARDER OF THE

Agents of Sustainable Development

Table of Contents

Acknowledgments

I would like to express my deepest appreciation to Michael Falls of Pride of Africa Wildlife Solutions. Without his collaboration, the export section of the dissertation would not have come to fruition. Michael's extensive wildlife freight forwarding expertise and his involvement in the Rhino's Return to Malawi project was crucial in providing a deep insight into the logistical operations behind this translocation. I am truly grateful for his optimism and altruism throughout this process.

I am also grateful to Jonathan Burrell (General Manager of C. Steinweg Bridge) for his collaboration throughout this journey. Jonathan was behind the logistical operations discussed in the import section of this dissertation and had provided me with his insight and expertise into the extensive procedures undertaken throughout this movement. I recognize his willingness to help since the project's inception, and for the time and effort he had sacrificed without hesitation.

My thanks are extended to Kester Vickery (co-founder of Conservation Solutions) and Martin Rickelton (Regional Operations Manager at African Parks) for granting me access to and trust with confidential and sensitive information regarding the translocation process and for their honourable contributions to the conservation of endangered species.

My sincerest gratitude to Charles Dey (International Supply Chain and Logistics Management Consultant) for his assistance and mentorship throughout this journey. The guidance he provided played an instrumental role in the depth and professionalism of this dissertation. His passion is contagious, and his expertise is boundless.

Introduction

This submission describes a battle and an adventure.

There are people determined to destroy the living heritage on the pale blue dot on the outer edge of the Milky Way we call home. These people are at war with courageous and unwavering heroes who are equally determined that our home will live and thrive. This submission describes but one small battle in a never-ending conflict.

At the same time, humans are fired up with imagination and determination to do things better by exploring new ways -- these motivators have taken them into a remote jungle to bring home the means of production.

It is a great privilege to share the stories of this battle and this adventure.

Export to Malawi: Black Rhino

"It's surely our responsibility to do everything within our power to create a planet that provides a home not just for us, but for all life on Earth" – Sir David Attenborough.

With the human population expanding at an exponential rate, it is inevitable that production and living space must expand to keep up with the ever-increasing needs of people. An effect on wildlife habitats and their inhabitants is almost unavoidable. Through human growth and production pollution, many species of flora and fauna have seen a drastic decline in their populations, causing nature to slowly fall out of balance due to our carelessness. However, there are some species whose populations are directly under attack, as they provide a commodity in demand. This is evident by the state of war that surrounds the rhino.

Rhino are sought after for their horn. In some cultures, it is traded as a product used in traditional medicine to cure everything from a hangover to cancer and is also shown off as a symbol of wealth and power. The trade can be particularly lucrative and can reach prices of up to $60 000 per kilogram on the black market, attracting severe poaching to Southern Africa, where rhinos are most abundant. The population of Black Rhino has seen a drastic decrease of 96% between 1970 and 1993, with their numbers dropping from 65 000 to only 2 300 living in the wild (Emslie & Brooks, 1999).

Since 1996, intense anti-poaching efforts and strategic translocations to safer areas have allowed the species to slowly recover and increase in population size. Black Rhino numbers at a continental level have more than doubled reaching an estimated 5 495 by end 2017 and 5 630 by end 2018 (Emslie et al. 2019).

The *Rhino's Return to Malawi* project was one of the strategic translocations that have helped to increase the Black Rhino population. Through a cooperative effort involving international governments, conservational specialists and wildlife freight forwarders, Black Rhinos were moved from South Africa to a protected habitat in Malawi. The roles played by all parties in carrying out this translocation will be outlined and discussed in this dissertation.

Anti-poaching is a war, and in times of war, it is very important to maintain confidentiality. In this case, whilst the processes and procedures are analyzed, many details have been redacted in the interest of protecting this highly endangered species.

1) Parties Involved

Founded in 2000, **African Parks (APN)** is a non-profit conservation organisation with the mission to save wildlife, protect their habitats and develop the communities that surround them. This is achieved through securing vast landscapes of protected area and providing effective park operations management. They collaborate with government authorities and local communities to ensure a reduction in poaching and human-wildlife conflict.

African Parks was the organiser of the Rhinos Return to Malawi project. The organisation facilitated a custodianship agreement between the Governments of South Africa and Malawi for the relocation of South African Black Rhinos to Liwonde National Park in Malawi. This agreement aimed to reestablish the Malawian Black Rhino population and to start a new breeding herd. This organization also provided the considerable funding required for the project.

Conservation Solutions specialize in large scale wildlife translocations across international boundaries. The team was contracted by APN to provide capturing, crating, transportation, and veterinary assistance throughout this translocation.

Pride of Africa Wildlife Solutions (PAWS) are live animal forwarding and clearing specialists. They were nominated by African Parks to take responsibility for the logistics coordination, documentation, and compliance with all statutory bodies in South Africa.

2) Statutory clearance and documentation

There were several statutory bodies involved in the authorization of the international movement of the Black Rhino.

Veterinary Authorization

Veterinary Authorization was effected through the pre-inspection of the export premises to ensure that there were no transmissible animal diseases, such is African Horse Sickness or Bovine Pleuropneumonia.

International Veterinary Certificate for Wildlife for Export to the Republic of Malawi from the Republic of South Africa

This document reflected the species list, destination and modes of transport used throughout. It was authorized and certified by KwaZulu-Natal Wildlife (Ezemvelo). (A*ppendix H)*

Convention of International Trade in Endangered Species (CITES)

CITES in South Africa operates under the Department of Environmental Affairs - National CITES Management Authority, who issue permits in respect of the export of all endangered species. On behalf of APN, the CITES permit application was made by PAWS after the capture and verification of the chip numbers of the rhinos and Ezemvelo issued the CITES Permit (*Appendix B*).

SARS Customs and Excise (Customs)

Once veterinary and CITES authorization had been obtained, the shipment was declared to Customs by PAWS on the SAD 500 Customs Declaration Form via EDI

(*Appendix C*). The goods were classified under tariff heading 0106.19 (6). Customs authorization was granted via SARS: Customs EDI Notification showing declaration status release and status information released (*Appendix D*).

Implementation of contingency plans

One of the rhino cows was found to be pregnant and could not be translocated, therefore the SAD 500 and CITES certificates had to be resubmitted with the relevant amendments excluding this rhino. This was authorized by the Customs authorities. (*Appendix E*)

IATA Live Animal Regulations (IATA – LAR)

The purpose of the IATA – LAR is to ensure that certain standards are maintained when transporting live animals to protect their health and safety, as well as to combat illegal trade in wildlife and wildlife products (IATA, 2019). The regulations outline certain criteria that must be met regarding the following:

- Shipper and carrier responsibilities and training
- Government regulations
- Carrier regulations
- Reservations and advance arrangements
- Animal behavior
- Documentation
- Container requirements
- Listing, description, and sizes of species
- Marking and Labeling
- Handling procedure
- World Organization for Animal Health (OIE) recommendations and compliance
- CITES

The statutory clearance, documentation applications issued, and precautions made in this movement ensured that the IATA - LAR were followed.

3) Description of the Operation

Tracking

Females around the age of 4 and males around the age of 7 were selected as this is when they begin to peak in physical condition, so survivability would be high. This is also when they are in their sexual development, which benefits the conservation effort as the rhinos would be searching for mating partners (Meyer, 2012).

Conservation Solutions scanned though iMfolozi Game Reserve via helicopter to track down the Black Rhinos (*Appendix G1)*. When spotted, they were darted and tranquilized for inspection (*Appendix G2*). All rhinos on this Game Reserve had been previously microchipped, and these microchips were scanned to ensure each animals' identity. The rhinos which were compatible and healthy were chosen for the movement. (*Appendix G3*)

Move to boma

Trucks moved to the position of the darted animals. Whilst tranquilized, each rhino was loaded onto flatbed trailers by the crane attachments of the trucks. Animals become stressed during transportation from changing environments, isolation, and cramped spaces, and can result in health complications. To prevent this, the rhinos were moved into bomas (shaded shelters) to accustom them to a smaller environment and to ensure that they did not carry diseases. They were kept in quarantine for six weeks. (*Appendix G4*)

Implementation of contingency plans

This is where it was discovered that one of the cows was pregnant and would therefore not be translocated.

Packaging

Conservation Solutions had designed and built specialized crating used to contain the rhinos during transportation. Openings allowed air to pass through the crates for sufficient oxygen and provided vets and caretakers a viewing point for checkups. The crate dimensions ensured that the rhinos didn't have room to lie down, as this would result in prolonged circulation blockage which would damage their bodies.

Road Transport

To negate the need for cranes to be present at the boma and at the airport, trucks with crane attachments were employed to carry the animals. The rhinos were lightly sedated, blindfolded and had earplugs fitted to be loaded into the specialized crating (*Appendix G5*) and crates were loaded onto flatbed trailers (*Appendix G6)*. Due to the unpredictable behavior and the sheer weight of the animals, precautions had to be made to prepare for any sudden shifts in weight distribution. The truck suspensions were adjusted accordingly, and the crates were lashed to the trailers. Once loaded, the trucks made their way from iMfolozi Game Reserve to King Shaka International Airport under police escort. (*Appendix G7*).

Air Transport

Due to time sensitivity, regularly scheduled air freight was not an option. PAWS sourced a charter aircraft for transportation of the animals. Considering the volume and weight of the shipment, a Boeing B747-400F was chosen.

PAWS was present during this process to oversee the operations, manage the loading, and ensure that everything went as planned. The rhinos in their crates were offloaded from the trucks, onto heavy duty ULD pallets (PMC 317*244cm) and netted (*Appendix G8*). Heavy duty plastic sheeting was pre-cut to the required sizes. Cellulose powder was layered between the sheets and crate (*Appendix G9*) to absorb the highly acidic urine and feces excreted by the rhinos so that any damage to the aircraft cargo space would be prevented. The rhinos were then loaded into the aircraft (*Appendix G10).* Preflight health checks were conducted, and medications administered (*Appendix G11*). PAWS prepared and presented an air waybill (AWB) to the airline who, on acceptance of the shipment, stamped the AWB, retained their copies and returned the remaining copies to PAWS (*Appendix F*). In terms of ICAO security regulations, the shipment was accepted as “known” cargo. The plane then took off from King Shaka International Airport and landed in Lilongwe International Airport. African Parks personal were present on the flight to oversee the rhino’s wellbeing.

Clearance

PAWS sent the AWB, Customs, Veterinary and CITES clearance documents to African Parks, who in turn relayed these documents to their Malawian Customs agent, so that the relevant Malawian clearance procedures were completed on their behalf.

Road Transport

Upon arrival, the crates were offloaded from the aircraft, detached from their ULDs, and were loaded onto flatbed trailers. Onsight vets conducted post flight health checks and microchip verification. The trucks then made way to Liwonde National Park (*Appendix G12*).

Release

African Park rangers and vets were present at the destination. The crates were lifted off the flatbed trailers and the animals were given one last health inspection (*Appendix G13*). After their health had been verified, the Black Rhinos were released into the wild (*Appendix G14*). Each animal was released in separate areas of the reserve to decrease the possibility of hostile behavior – Black Rhinos are territorial and aggressive.

4) Closure

The purpose behind this project was not just to move a commodity from point A to point B. The mission of the Rhinos Return to Malawi project was to contribute to the conservation of these endangered species, and to ensure the existence of Black Rhino in the future. The success of this translocation is evident, as four rhino calves were born in Liwonde National Park as of November 2020, which not only increases the Black Rhino population, but improves the population's genetic diversity to ensure sustainable and healthy growth of the species.

Import from Malaysia: Ball Mill

Africa is a continent abundant with natural resources. In this context, Zimbabwe has recently emerged as a leading world resource provider. Alongside its agricultural operations, mining is one of Zimbabwe's major economic contributors and the industry is estimated to be worth $8.8 billion by 2023 (Chamber of Mines of Zimbabwe, 2020). Once a leading commodity, gold exports have seen a slight and steady decline, however, export of nickel has made a sudden rise. Nickel is used in the manufacturing of rechargeable batteries and is a preferred metal because of its stability under high temperatures and resistance to overcharging (Nickel Institute, 2019). With the global push towards lowering carbon emissions, the demand for electric vehicles has been steadily increasing. The demand for these vehicles has led to the increase in battery production, and the subsequent increase in demand for nickel.

To capitalize on this trend, Freda Rebecca Mine in Zimbabwe set out to expand their production of nickel and wanted to incorporate a ball mill in their operation. This piece of machinery is a large grinder, consisting of a hollow cylindrical shell filled with heavy steel balls. As the mill rotates around its axis, the balls repetitively rise up and crash back down after each rotation, which crushes robust minerals into fine powders. The mine will use the ball mill to grind nickel into its powdered form and will later export it for the manufacturing of batteries.

The mine contracted New Enterprise Trading (NET) to acquire a ball mill on their behalf. The logistical operations required to import this abnormal load will be dissected and discussed in this dissertation.

1) Parties Involved

Company	Involvement	Location
Selinsing Gold Mine	Seller	Sg Koyan, Malaysia
New Enterprise Trading	Procurement Contractor	Gauteng, South Africa
Freda Rebecca Mine	Buyer	Bindura, Zimbabwe
C. Steinweg Bridge (C. Steinweg)	Forwarding and clearing agent	Gauteng, South Africa
Megalift	Abnormal Loading and Handling	Port Klang, Malaysia
Marthinusen & Coutts	Refurbishment Centre	Gauteng, South Africa
Titanus Slew Rings (TSR)	Refurbishment Centre	Gauteng, South Africa

2) Procurement Process

New Enterprise Trading sourced a decommissioned ball mill in the junk yard of a gold mine in Sg Koyan, Malaysia. The mine owners, Selinsing, were selling the ball mill under “as is” conditions, so any defects or damages on the cargo would be the buyer’s liability once the sale had been made. This is also known as a “what you see is what you get” transaction. It would also be the responsibility of the buyer to load and move the cargo from the origin site to their desired destination. The ball mill was not in functioning form, had no warranty and had no promise of durability, but was very cheap when compared to new machinery. It was procured as the preferred alternative.

The ball mill had been left in individual pieces from when it was first decommissioned. Selinsing provided photos of each individual piece to NET so the extent of the wear and tear could be evaluated. Weights and dimensions were also provided, allowing NET to estimate the scope of the operation that would be required to move the cargo. (*Appendix H & R1*)

In this transaction, the Incoterms® Rule 2010 was Ex Works. In terms of the guidance note applicable to this Incoterm, “Ex Works” means that the seller delivers when it places the goods at the disposal of the buyer at the seller's premises or at another named place. (International Chamber of Commerce, 2011). This would later be specified in the Commercial Invoice. (*Appendix J*)

In terms of this transaction, the risk of the goods transfers to NET once they were made available at Selinsing’s junkyard, and NET (through their appointed freight forwarder) would be responsible for the total movement of goods, compliance with export and import statutory requirements and insurance from door-to-door.

3) Cargo Details

When the ball mill was decommissioned from its origin mine, it was separated into parts for easier transportation to the junkyard and had been left separated throughout its retirement. The ball mill remained separated for breakbulk shipment throughout this import, each part having a unique dimension, weight, and design that had to be considered when loading and transporting. When fully assembled, it weighed a total of 178.5 Tons. Each piece had the following characteristics:

No	**Item**	**Dimension**	**Weight**	**Quantity**
1	Feed End Shield	*4.5mx4.5mx1.61m*	*25T*	1
2	Discharge End Shield	*4.5mx4.5mx1.61m*	*25T*	1
3	Girth Gear Half Section	*6.8mx3.4mx0.93m*	*18T*	2
4	Pinion Assembly	*3.5mx1.72mx1.72m*	*10T*	1
5	Mill Shield	*5.35mx5.35mx3.70m*	*40T*	2
6	Mill Motor	*4.3mx5.1mx4.3m*	*46T*	1
7	Mill Bearing	*2.47mx0.85mx1.20m*	*2.5T*	2

8	Clutch Outer Assembly	*1.9mx1.9mx0.91m*	*2T*	1
9	Clutch Drum	*1.3mx1.3mx0.91m*	*3T*	1
10	Throat Liner	*1.5mx1.5mx0.95m*	*2T*	1
11	Trunnion Spacers	*2.0mx2.0mx0.95m*	*1T*	1
12	Hydraulic Unit	*1.45mx1.0mx1.15m*	*2T*	1
13	Miscellaneous Parts	*1.7mx1.7mx0.65m*	*2T*	1
TOTAL:			178.5T	16

4) Freight Estimate

C. Steinweg are a freight forwarding service provider specializing in projects, mining, and energy. They have offices worldwide, including in Port Klang, and were well suited to provide the door-to-door services that NET required. A quote was provided with rates for each process required to move the cargo, which gave NET an estimate on how much the movement would cost.

<u>160-ton Crane Hire</u>

- Delivery from Port Klang and redelivery
- 2 days of use

<u>EXW Selinsing Mine to Port</u>

- Port handling
- Collection from mine and delivery to port
- Route Survey
- Cranage cost: transfer from road vehicles to MAFI trailers
- Roll-on of MAFI trailers to vessel

Ocean Freight

- Ocean freight from Port Klang to Durban via RORO vessel

SA Landside Costs

- Landing costs, including roll-off of MAFI trailers
- Cranage costs: transfer from MAFI trailer to road vehicles
- South Africa import VAT charges

Local Delivery from Port to Refurbishment Centers, Gauteng

- Delivery from port to Marthinusen & Coutts
- Delivery from port to TSR

Cross Border Delivery

- Export Customs clearance
- Cranage hire: loading pieces onto road vehicles
- Delivery from Marthinusen & Coutts/TSR to Freda Rebecca Mine in Zimbabwe

Insurance Premiums

- Insurance premium based on delivered cost to Gauteng + 10%
- Insurance premium based on delivered cost to Freda Rebecca Mine + 10%

Documentation and agency charges

- Documentation
- Finance free based on 120 days
- Disbursement fee

Upon accepting this quote, C. Steinweg were nominated to act on behalf of NET to move and clear the cargo.

5) Multimodal Logistics Arrangements

Origin to port

C. Steinweg nominated Megalift, who specialize in loading and handling abnormal cargo, to inspect the pieces at the origin site and produce a method statement for review before commencement of the logistics operation. This document assessed the cargo, the origin site, and the surrounding routes so that the necessary resources would be available on the day of the operation, and that all precautions are taken to ensure an efficient movement to the port of load.

Vessel Booking

Due to the abnormal size of the pieces, the cargo could not be containerized. The cargo was booked onto a Roll-on/Roll-off (RORO) vessel and EUKOR was contracted to carry out the ocean transportation of the cargo. They were given a packing list so that the correct provisions were made for the abnormal cargo, in particular the provision of MAFI trailers.

Malaysian Customs clearance

Prior to the movement of the cargo, the shipment required to be cleared through Malaysian Customs and was done by C. Steinweg's Malaysian agents.

Route Survey

The origin site was clearly not intended for frequent visitation. Dirt roads and obstructions created a barrier for abnormal goods to pass. Megalift dismantled and removed these obstructions that would have otherwise hindered the efficient movement of the trucks in and out of the site. (*Appendix R3*)

Trailers

The dimensions, weight, and shape of each piece was considered when the type of trailer to be used was decided. Low loader trailers were used to transport the mill shield, mill motor, end shields and gear girths as these provide an easy platform for space and weight management for abnormal cargo. General trailers were used to transport the pieces which were not abnormal. Each piece had been measured and weighed beforehand and schematics had been created so that the positioning of each piece on the trailer was determined for the most optimised distribution of weight and space. (*Appendix I*)

2 units of 40ft General Trailers were used for cargo not exceeding *12m(length)*x*2.3m (width)*x*3m(height)* in dimension and/or *20T* in weight.

6 units of Low Loader trailers, also referred to as Flat Bed Trailers, were used for cargo exceeding *12m(length)*x*6m(width)*x*4.3m(height)* in dimension and/or *50T* in weight.

Lifting

A *160T* mobile crane, contracted by Megalift, was present at the site to lift the cargo onto their respective trailers. Wire rope slings were tied around each piece and were

attached to a shackle and crane hook, which allowed the crane to load the cargo onto the trailers. (*Appendix L and R2*)

Lashing

Once loaded, the cargo was secured onto the trailers to ensure stability of the pieces during transit. Chain blocks were used for robust and heavy pieces and ratchet belts were used for thinner more delicate pieces to ensure that no further damage would occur during lashing. Lashing points were specified in schematics provided by Megalift to ensure that the pieces would be securely fastened onto their respective trailers. (*Appendix M*)

Police Escort

In Malaysia, a police escort is mandatory when moving abnormal goods on road. This was prearranged. (*Appendix R4*)

Port to port

Loading

The pieces were transferred from the road vehicles onto MAFI trailers and were lashed to ensure minimal movement during transit with consideration to the 6 movements that occur at sea: heave, sway, surge, roll, pitch and yaw. An agent on behalf of C. Steinweg was present to ensure the quality of the lashing and filled out a surveyor's report. A Lashing Certificate was given to C. Steinweg, which mitigates any issues or claims that may be made if any damage is found upon arrival that would have occurred during transit, ensuring the forwarder would not be held liable. The trailers were towed onto the RORO vessel, the Grand Uranus. C. Steinweg Malaysia was given a clean, on-board Ocean Bill of Lading (OBL) which served as a document of title, showing proof that the

goods had been loaded aboard the vessel in apparent good order and condition and ensured the contractual obligation of the shipping line to provide deep-sea transportation of the cargo to a set port. (*Appendix N*)

South African clearance procedures were as follows:

South African Harmonized System Tariff Classification

During the planning phase of the operation, it was determined that the ball mill falls under the harmonized system (HS) tariff classification 8474.20.00(6) with the full tariff description:

Machinery for sorting, screening, separating, washing, crushing, grinding, mixing or kneading earth, stone, ores or other mineral substances, in solid (including powder or paste) form; machinery for agglomerating, shaping or moulding solid mineral fuels, ceramic paste, unhardened cements, plastering materials or other mineral products in powder or paste form; machines for forming foundry moulds of sand: Crushing or grinding machines. (SARS, 2020)

In terms of the applicable South African harmonized system code, goods falling under this tariff heading are duty free, but all imported products must pay South Africa VAT.

Import Permit

Apart from books and personal effects, any used, second hand or refurbished goods being imported to South Africa require an import permit. The permit was obtained before the shipment was affected through the International Trade Administration Committee (ITAC). Application was submitted to ITAC on placing the order for the goods by New Enterprise Trading, and the import permit was issued via EDI (*Appendix H*).

Import Clearing Instruction

On receipt of the Bill of Lading, packing list and commercial invoice, C. Steinweg contacted NET to obtain the Import Clearing Instruction. From the Import Clearing Instruction, it is noted that the clearance was to be affected under Customs Procedure Code A (Home Use), which implied that, for the purpose of this phase of the project, the goods were to be regarded as being permanently imported into South Africa.

Submission and Release Procedure

When loaded in Malaysia, the commercial invoice, packing list and bill of lading were transmitted electronically by C. Steinweg Malaysia to C. Steinweg Bridge.

The information contained in these documents were transcribed into Customs worksheet and the Customs Declaration SAD 500. This was electronically submitted to Customs via an EDI process, together with the relevant import permit data and the VAT payable deducted from the C. Steinweg Bridge deferred payment account with Customs. (*Appendix Q)*

Customs authorization was granted via SARS: Customs EDI Notification showing declaration status released and status information released.

The goods were finally released by Customs prior to arrival of the carrying vessel.

Shipping line release

Once the Customs release had been effected, the release, proof of payment of the shipping line freight and other charges and an original bill of lading were presented to the shipping line. Once the documents were verified, EUKOR issued a Delivery Release Order to C. Steinweg.

Landing Order

For any non-containerised goods imported into the country via ocean freight, a Landing Order must be provided to the local port authority Transnet Port Terminals (TPT) before it can be released to the importer from the vessel or bonded warehouse. C. Steinweg filled out the form with the marks, description of contents, weight, and dimensions of each piece of cargo. (*Appendix I*)

The form was also be accompanied by:

A Packing List which ensured the same goods that were loaded onto the vessel at the port of load were the same goods being unloaded into the country.

A Suppliers Invoice which proved that the goods had been obtained through a legal transaction.

The Delivery Release Order signed by the shipping line as proof that all freight charges had been paid and that the release of the cargo was authorised.

The SARS: Customs EDI Notification which declared status information released.

TPT approved the Landing Order, debited the amount of the landing charges to the C. Steinweg deferred account with TPT, and the cargo was released to C. Steinweg.

Transhipment and implementation of contingency plans

The cargo had to be transhipped in Singapore, and an issue arose when the shipping line's soonest RORO service to Durban had been delayed due to poor weather conditions around the Singapore coast, blocking the vessel from berthing. After a 5-day delay, the weather had cleared, and the vessel was safe to dock. However, due to

miscalculations by the shipping line, it had insufficient space to fit the motor of the ball mill onboard and it was unable to be loaded. The cargo had to remain in Singapore for another week until the Morning Cornet, a RORO vessel with sufficient space, had arrived.

Unloading

The vessel berthed starboard side in Durban to accommodate the RORO ramp. The MAFI trailers were then towed off the vessel and the cargo was transferred by mobile crane onto road vehicles and lashed. A Lashing Certificate was given to the forwarder to prove adequate lashing had been made.

Load report forms were filled out by C. Steinweg Bridge. This was a proof of receipt of the cargo by the truck operators and reflected their cargo and the estimated time of delivery. These forms were provided to New Enterprise Trading to inform the refurbishment sites. (*Appendix K*)

Port to Refurbishment

The cargo was road transported from the Durban Port Terminal up to Marthinusen & Coutts and TSR, the refurbishment sites in Gauteng, where the pieces of the ball mill would be restored to working condition.

6) Insurance

It is noted from the Import Clearing Instruction that the importer did not require marine insurance. However, in terms of a separate instruction, marine insurance was initiated by C. Steinweg Bridge. The goods were insured for USD300 000 on a door-to-door

basis from when the cargo was loaded on the trucks at the origin site until they were offloaded at the refurbishment site. The cargo was insured under Institute Cargo Clauses (ICC) “A” terms including war risks as well as strikes, riots, and civil commotions risks.

7) Delivery and Invoicing

Once final delivery had been affected to the respective refurbishment sites, clean Delivery Notes were signed at each site and returned to C. Steinweg Bridge.

These Delivery Notes and all supporting documents evidencing all disbursements were collated, the amounts brought to account and the invoice for the disbursements, documentation and agency charges were delivered to the client.

8) Closure

As there were no cargo claims, this part of the transaction is finished. The goods are undergoing refurbishment and once completed, arrangements will be made to export the goods to Zimbabwe and delivered to Freda Rebecca Mine.

FIATA 2021 theme and United Nations Sustainable Development Goals

Supply chain operations and strategies, especially in globally visible and operational companies, can certainly have a positive impact by living up to the United Nations Sustainable Development Goals (UN SDGs).

The theme of the 2021 FIATA Congress *"The Changing Climate of Logistics"*, resonates well with UN SDG# 13 *"Take urgent action to combat climate change"*.

The two shipments discussed in this paper meet not only this Climate Change UN SDG, but others as well:

UN SDG	**How supported by these shipments**
UN SDG #8: Decent Work and Economic Growth	Rhino translocation: Tourism is a major revenue resource for Malawi and the new rhino population will attract many new tourists and thus create additional tourism/hospitality employment opportunities. Ball mill: Employment provided by the refurbishment process and extended employment opportunities at Freda Rebecca Mine.
UN SDG #9: Industry, Innovation, and Infrastructure	Rhino translocation: Relocation is an innovative way of protecting the species from poaching and of creating species gene diversification. Ball mill: The innovative procurement approach in sourcing a secondhand piece and using existing South African technology to refurbish it.
UN SDG #12: Responsible Production and Consumption	Rhino translocation: Relocation of the rhino is not only good risk management but is also responsible employment of natural resources. Ball mill: Procuring secondhand equipment and refurbishing it is a prime example of responsible production and consumption.
UN SDG #13: Climate Action	Rhino translocation: Increase of species diversity in Malawi contributes to a more balanced ecology which become more resilient to climate change.

	Ball mill: The refurbishment of the secondhand plant uses far less energy than the manufacturing of a new one, thus reducing greenhouse gases.
UN SDG # 15: Life on Land	Rhino translocation: Humanity is the primary cause of earth's 6th Mass Extinction in which species are becoming extinct 100 times faster than they would without human impact. This relocation represents a small but significant human act to reverse this trend.
UN SDG #17: Partnerships for the Goals	Ball mill and Rhino translocation: Neither of these projects could have been achieved in the most sustainable way possible without the full commitment and involvement of all the partners concerned. This coordination was made possible by the efforts of the respective freight forwarders involved in both operations.

Conclusion

This submission is a clear demonstration of the vital role played by freight forwarders not only as “Architects of Transport”, but also as “Agents of Sustainable Development” as shown by the respective leadership roles played by PAWS and C. Steinweg Bridge in the two projects described.

It is also a clear demonstration that, in the context of freight forwarding, “leading” is not simply a question of directing a process from a distance. It is a hands-on process, always demanding unremitting attention at every strategic point throughout.

Bibliography

Emslie, R., & Brooks, M. (1999). *African Rhino: Status Survey and Action Plan.* Gland, Switzerland: IUCN.

Emslie, R., Milledge, S., Brooks, M., Strien, N., & Dublin, H. (2009). *African and Asian Rhinoceroses – Status, Conservation and Trade. A report from the IUCN Species Survival Commission (SSC) African and Asian Rhino Specialist Groups and TRAFFIC to the CITES Secretariat pursuant to Decisions 13.23-25 taken at the 13th meeti.*

Meyer, A. (2012). *Rhinos Life Cycle*. Retrieved from Rhinos Info: https://www.rhinosinfo.com/rhinos-life-cycle.html#:~:text=RHINOS%20LIFE%20CYCLE&text=Rhinoceroses%2C%20like%20other%20large%20land,on%20a%20long%2Dterm%20basis.

IATA. (2019). *Live Animals Regulations (LAR).* International Air Transport Association. Retrieved from https://www.iata.org/en/publications/store/live-animals-regulations/?_ga=2.137777971.2052342974.1611406620-2140364315.1599038127

International Chamber of Commerce. (2011). Incoterms® 2010. 15. Retrieved from https://iccwbo.org/resources-for-business/incoterms-rules/incoterms-rules-2010/#:~:text=%E2%80%9CEx%20Works%E2%80%9D%20means%20that%20the,%2C%20warehouse%2C%20etc.).

Chamber of Mines of Zimbabwe. (2020, 09 06). *Zimbabwe - Country Commercial guide*. Retrieved from International Trade Administration - Department of Commerce: https://www.trade.gov/country-commercial-guides/zimbabwe-mining-and-minerals

Nickel Institute. (2019). *Nickel in Batteries*. Retrieved from Nickel Institute: https://nickelinstitute.org/about-nickel/nickel-in-batteries/#:~:text=Nickel%20(Ni)%20has%20long%20been,the%20fore%20in%20the%201980s.

SARS. (2020). Customs External Policy Tariff Classification.

Appendixes

A. International Veterinary Certificate

No. [redacted] D

Certificate no.

REPUBLIC OF SOUTH AFRICA

INTERNATIONAL VETERINARY CERTIFICATE
FOR WILDLIFE FOR EXPORT
TO THE REPUBLIC OF MALAWI
FROM THE REPUBLIC OF SOUTH AFRICA

RESPONSIBLE VETERINARY ADMINISTRATION: Department of Agriculture, Land Reform and Rural Development

REFERENCE NO: [redacted]

ISSUING VETERINARY AUTHORITY: KZN Department of Agriculture and Rural Development

~~MOZAMBIQUE~~ VETERINARY IMPORT PERMIT: MALAWI (Issued Prior to Malawi)

Permit Number: [redacted]

Date of issue: [redacted]

Expiry date: 2 Months from date of issue

A. DESCRIPTION

1. **Identification of Animals:** Black Rhino

COUNT	SPECIES
18	*Diceros bicornis*

2. **Origin of Animals:**

2.1 Name and Address of Exporter: African Parks Network, Fourway Office Park, 52 Grosvenor Road, Bryanston, Johannesburg, South Africa

2.2 Name, Telephonic Contact Details, and Address of Origin: [redacted]

3. **Destination of Animals:**

3.1 Name and Address of Consignee: African Parks, Liwonde National Park, Malawi

3.2 Name and Address at Final Destination: Liwonde National Park, Malawi

3.3 Mode of Transport - Road to Kingshaka International Airport
Durban to Lilongwe by Air
Lilongwe to Liwonde National Park by road

B. CITES document

PERMIT / CERTIFICATE No. [redacted]

CONVENTION ON INTERNATIONAL TRADE IN ENDANGERED SPECIES OF WILD FAUNA AND FLORA

☒ EXPORT
☐ RE-EXPORT
☐ IMPORT
☐ OTHER

ORIGINAL

2. Valid [redacted]

3. Importer (name and address): Peter Maunge, African Parks Liwonde National Park c/o Department of National Parks & Wildlife Liwonde, Machinga, Malawi

4. Exporter / Re-exporter (name, address and country): Ezemvelo KZN Wildlife Game Capture, Rhino Bomas Impofozi Game Reserve R618, Hlabisa, Mbubatuba, KwaZulu-Natal, South Africa

3a. Country of Import: Malawi

5. Special conditions: Permit is invalid without the attached addendum with security stamp listing the attached conditions. Permit also issued in terms of NEMBA: TOPS Regulations

6. Name, address, national seal / stamp and country of Management Authority:
Department of Environmental Affairs
Private Bag X447
PRETORIA
0001
SOUTH AFRICA

5a. Purpose of the transaction (see reverse): N

5b. Security stamp No: [redacted]

	7.a SCIENTIFIC NAME (genus and species) AND COMMON NAME OF ANIMAL OR PLANT	8. Description of specimens, including identifying marks or numbers (applicable) if live	10. Appendix No and source (see reverse)	11. Quantity (including unit)	11a. Total exported / quota
A	7.a Diceros bicornis minor (Black Rhinoceros)	8. Live, See attached addendum	10. I W	11. 18 (Eighteen)	11a.
B					
C					
D					

	12. Country of origin*	Permit No.	Date	12a. Country of last re-export	Certificate No.	Date	12b. No. of the operation ** or date of acquisition ***
A							
B							
C							
D							

* Country in which the specimens were taken from the wild, bred in captivity or artificially propagated (only in case of re-export)
** Only for specimens of Appendix I species bred in captivity or artificially propagated for commercial purposes
*** For Pre-Convention specimens

DEPT. OF ENVIRONMENTAL AFFAIRS
PRIVATE BAG X 447
[redacted]
PRETORIA 0001

13. THIS PERMIT / CERTIFICATE IS ISSUED BY: [redacted]

C. SAD 500 – Customs Declaration Form

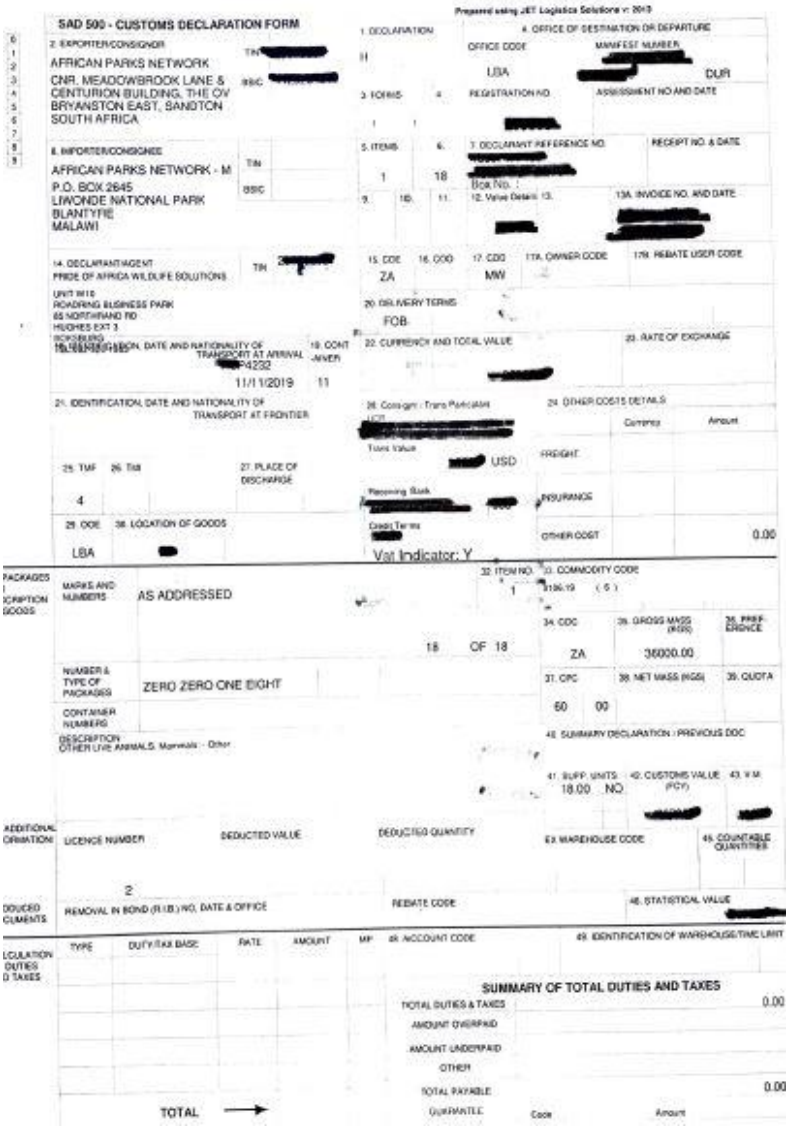

SAD 500 - CUSTOMS DECLARATION FORM

Prepared using JET Logistics Solutions v. 2013

1. DECLARATION: H

4. OFFICE OF DESTINATION OR DEPARTURE — OFFICE CODE: LBA — MANIFEST NUMBER: DUR

2. EXPORTER/CONSIGNOR: AFRICAN PARKS NETWORK, CNR. MEADOWBROOK LANE & CENTURION BUILDING, THE OV BRYANSTON EAST, SANDTON SOUTH AFRICA — TIN [redacted] — BBIC [redacted]

3. FORMS — 4. REGISTRATION NO. [redacted] — ASSESSMENT NO AND DATE

8. IMPORTER/CONSIGNEE: AFRICAN PARKS NETWORK - M, P.O. BOX 2645, LIWONDE NATIONAL PARK, BLANTYRE, MALAWI — TIN — BBIC

5. ITEMS: 1 — 6. 18 — 7. DECLARANT REFERENCE NO. [redacted] — RECEIPT NO. & DATE

9. 10. 11. 12. Value Details 13. Box No. : — 13A. INVOICE NO. AND DATE [redacted]

14. DECLARANT/AGENT: PRIDE OF AFRICA WILDLIFE SOLUTIONS — TIN [redacted]
UNIT W10, ROADRING BUSINESS PARK, 85 NORTHRAND RD, HUGHES EXT 3, BOKSBURG

15. CODE: ZA — 16. CODE — 17. CODE: MW — 17A. OWNER CODE — 17B. REBATE USER CODE

20. DELIVERY TERMS: FOB

18. IDENTIFICATION, DATE AND NATIONALITY OF TRANSPORT AT ARRIVAL: [redacted]P4232 11/11/2019 — 19. CONTAINER: 11

22. CURRENCY AND TOTAL VALUE [redacted] — 23. RATE OF EXCHANGE

21. IDENTIFICATION, DATE AND NATIONALITY OF TRANSPORT AT FRONTIER

26. Consignor : Trans Particulars [redacted] — Trans Value [redacted] USD

24. OTHER COSTS DETAILS — Currency — Amount — FREIGHT — INSURANCE — OTHER COST 0.00

25. TMF: 4 — 26. Tnd — 27. PLACE OF DISCHARGE — Reporting Bank [redacted] — Deal Terms [redacted]

29. CODE: LBA — 30. LOCATION OF GOODS [redacted]

Vat Indicator: Y

PACKAGES & DESCRIPTION OF GOODS — MARKS AND NUMBERS: AS ADDRESSED — 18 OF 18

32. ITEM NO. 1 — 33. COMMODITY CODE 0106.19 (5) — 34. CDC: ZA — 35. GROSS MASS (KGS): 36000.00 — 36. PREFERENCE

NUMBER & TYPE OF PACKAGES: ZERO ZERO ONE EIGHT — 37. CPC: 60 00 — 38. NET MASS (KGS) — 39. QUOTA

CONTAINER NUMBERS — DESCRIPTION: OTHER LIVE ANIMALS, Mammals - Other

40. SUMMARY DECLARATION / PREVIOUS DOC

41. SUPP. UNITS: 18.00 NO — 42. CUSTOMS VALUE (FCY) [redacted] — 43. V.M. [redacted]

ADDITIONAL INFORMATION — LICENCE NUMBER — DEDUCTED VALUE — DEDUCTED QUANTITY — 44. WAREHOUSE CODE — 45. COUNTABLE QUANTITIES

2

DEDUCED DOCUMENTS — REMOVAL IN BOND (R.I.B.) NO, DATE & OFFICE — REBATE CODE — 46. STATISTICAL VALUE [redacted]

CALCULATION OF DUTIES & TAXES — TYPE — DUTY/TAX BASE — RATE — AMOUNT — MP — 48. ACCOUNT CODE — 49. IDENTIFICATION OF WAREHOUSE/TIME LIMIT

SUMMARY OF TOTAL DUTIES AND TAXES
TOTAL DUTIES & TAXES 0.00
AMOUNT OVERPAID
AMOUNT UNDERPAID
OTHER
TOTAL PAYABLE 0.00
GUARANTEE — Code — Amount

TOTAL →

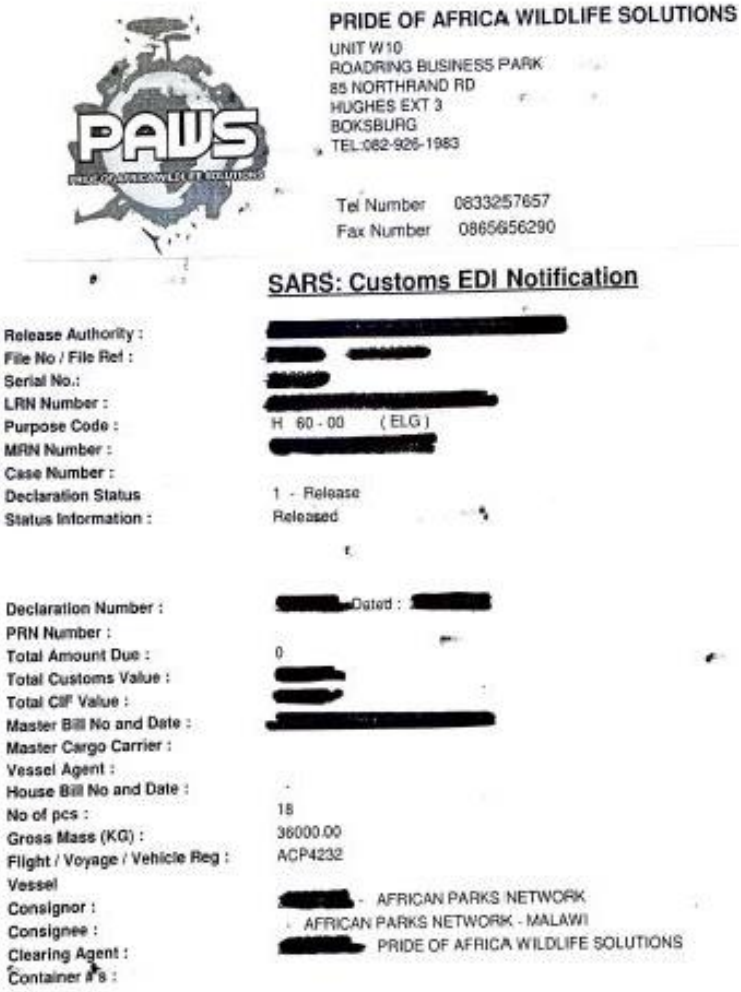

PRIDE OF AFRICA WILDLIFE SOLUTIONS
UNIT W10
ROADRING BUSINESS PARK
85 NORTHRAND RD
HUGHES EXT 3
BOKSBURG
TEL:082-926-1983

Tel Number 0833257657
Fax Number 0865656290

SARS: Customs EDI Notification

Release Authority : [redacted]
File No / File Ref : [redacted]
Serial No.: [redacted]
LRN Number : [redacted]
Purpose Code : H 60 - 00 (ELG)
MRN Number : [redacted]
Case Number :
Declaration Status 1 - Release
Status Information : Released

Declaration Number : [redacted] Dated : [redacted]
PRN Number :
Total Amount Due : 0
Total Customs Value : [redacted]
Total Cif Value : [redacted]
Master Bill No and Date : [redacted]
Master Cargo Carrier :
Vessel Agent :
House Bill No and Date :
No of pcs : 18
Gross Mass (KG) : 36000.00
Flight / Voyage / Vehicle Reg : ACP4232
Vessel
Consignor : [redacted] - AFRICAN PARKS NETWORK
Consignee : AFRICAN PARKS NETWORK - MALAWI
Clearing Agent : [redacted] PRIDE OF AFRICA WILDLIFE SOLUTIONS
Container #'s :

D. Customs EDI Notification

E. SAD: Voucher of Correction

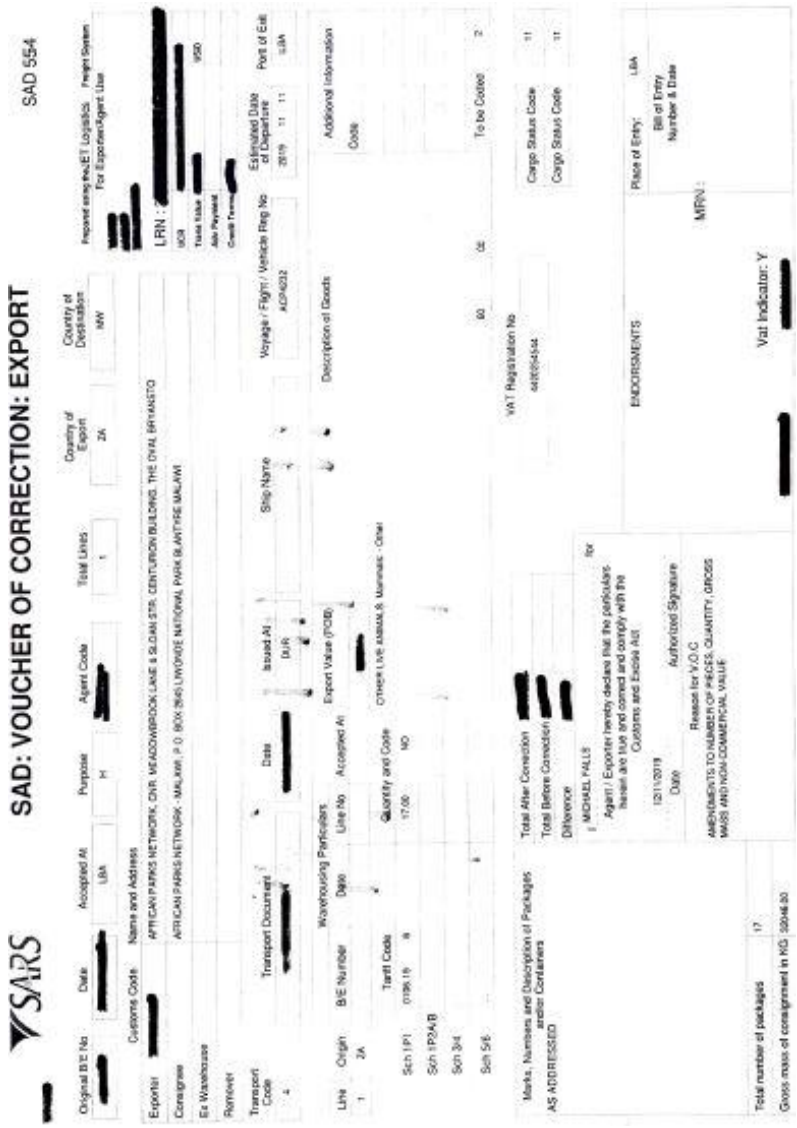

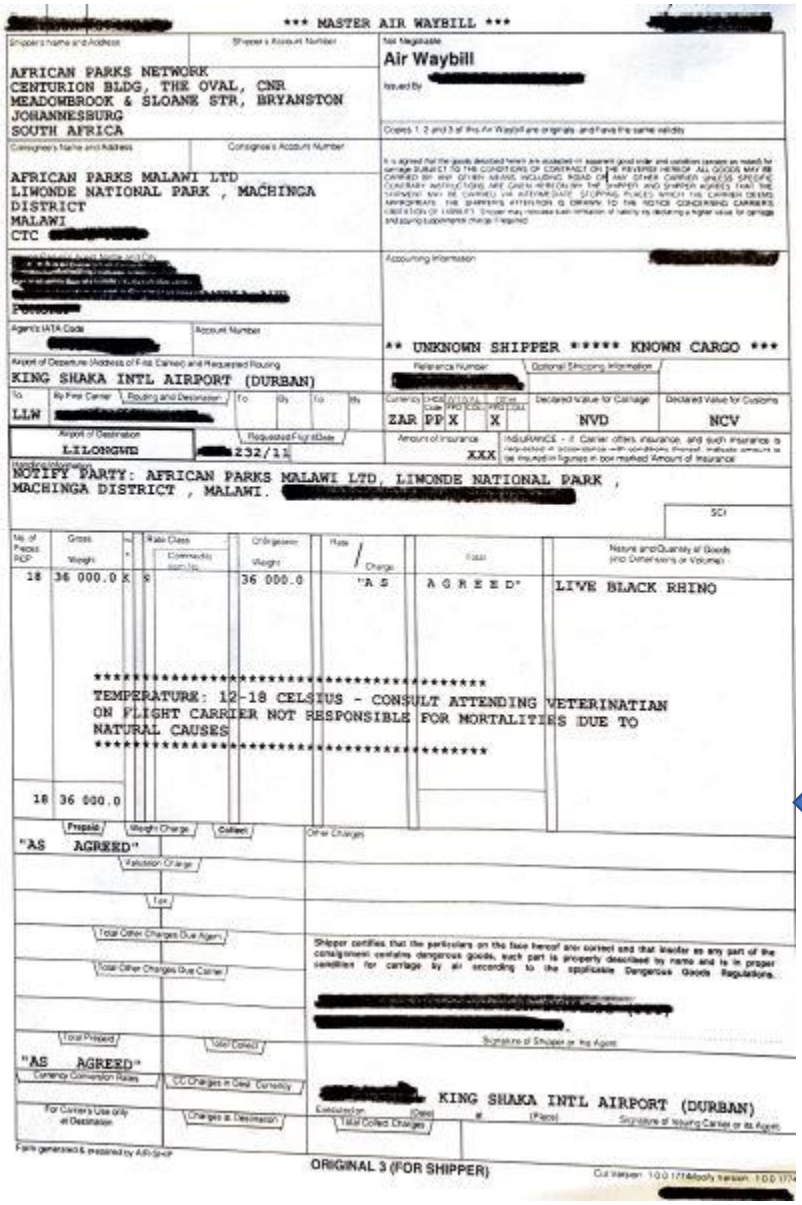

F. Master Air Waybill

G. Photographic narrative of the translocation

1. Tracking team set out to find the rhinos.

2. Rhino spotted and darted.

3. Veterinary health and microchip checks.


4. Rhinos in quarantine in the boma.


5. Loading into the crates.


6. Crates lifted onto flatbed trailers.


7. Transport to King Shaka International Airport.

8. Crates offloaded from the trailers to ULDs.

9. Crates wrapped and lashed.

10. Loading into the aircraft.

11. Pre-flight veterinary checks.

12. Transport to Liwonde Game Reserve.

13. Crates offloaded at destination.

14. Final Release.

H. Initial listing of the ball mill

Item 1: Feed end shield

Notes: Send to Adlam in Johannesburg (High priority)
Height: 1610mm
Diameter: 4500mm
Mass: 25T

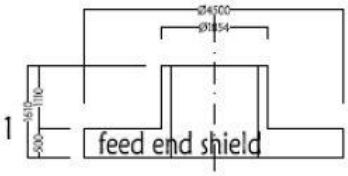

I. Trailers schematics for weight and space distribution

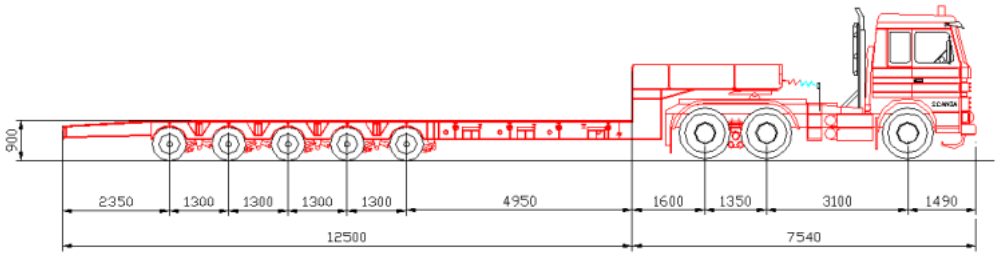

J. Commercial Invoice

COMMERCIAL INVOICE

ABLE RETURN SDN. BHD. (549631-
157, Jalan Bukit Bius, 27200 Kuala Lipis,
Pahang Darul Makmur, MALAYSIA.
Tel. No.: +609 3313 888
Fax. No.: +609 3313 999
E-mail: jumat@selinsingmine.com

New Enterprise Trading (Proprietary) Limited
Suite 2, Ferndale Mews (South),
15 Dover Street Randburg,
Cnr Dover & Oak Street,
Randburg, Gauteng,
Johannesburg 2125, South Africa
Tel. No : +27 11 781 1602 / 011-781 1387
E: nistevenson@newent.co.za

Invoice No.: AR20200708-01
Date : 09 July 2020
Purchase Order No.: 1000051879

NO.	DESCRIPTION	QUANTITY		UNIT PRICE [USD]	TOTAL [USD]
1-	Used Ball Mill 16ft x 23ft, Components	1	Lot	[redacted]	[redacted]

Type: Overflow
Body: Two parts of shell
Manufacturer: Kobe Steel, Japan under licensed from Allis Chalmers
Mill speed: 13.58 rpm
Gear type: Helical

Incoterms : Ex-works Selinsing Gold Mine, 27650 Kuala Lipis, Pahang, Malaysia. Incoterms 2010
HS Code : 8474 90 1000

Total Amount USD [redacted]

ABLE RETURN SDN. BHD. (549631-D)

Jisee Shah Saleh

K. Load Report

C. Steinweg Logistics
SOP 8.2

C. STEINWEG LOGISTICS

SUPPORTING DOCUMENT	SD 038
PROJECT REPORT	Page 1 of 2

CLIENT NAME	PME		
CONTROLLER	CHERESSE PILLAY	FILE NUMBER	SSI2009D0199
VESSEL NAME	MORNING CORNET V:121	BERTH/LOCATION	POINT Q&R
CARGO DESCRIPTION	PROJECT CARGO		
NO. OF PCS	3	WEIGHT	21.5000 KG
MEASURE	L N/A W N/A H N/A		
PROJECT TYPE	LOADING ☑ DISCHARGE ☐ INSPECTION ☑ OTHER ☐(SPECIFY)		
DATE	2020/10/07	START TIME	08:00
END TIME	18:00		

TRANSPORT CONDUCTED BY CSL?	YES ☐ NO ☑	HAULER NAME	LE BROCK
TRUCK REG.	LEBROK1ZN	TRAILER 1	NU123265
TRAILER 2	N/A		

WAREHOUSING CONDUCTED BY CSL?	YES ☐ NO ☑	WAREHOUSE NAME	N/A
WAREHOUSE MANAGER/SUPERVISOR	TPT SUPERVISOR		

COMMENTS
LOADED AS PER BELOW:
GIRTH GEAR B -18.000 MT
BEARING DISCHARGE END – 2.500 MT
TRUNNER SPACER – 1.000 MT

L. Schematic of the crane loading operation

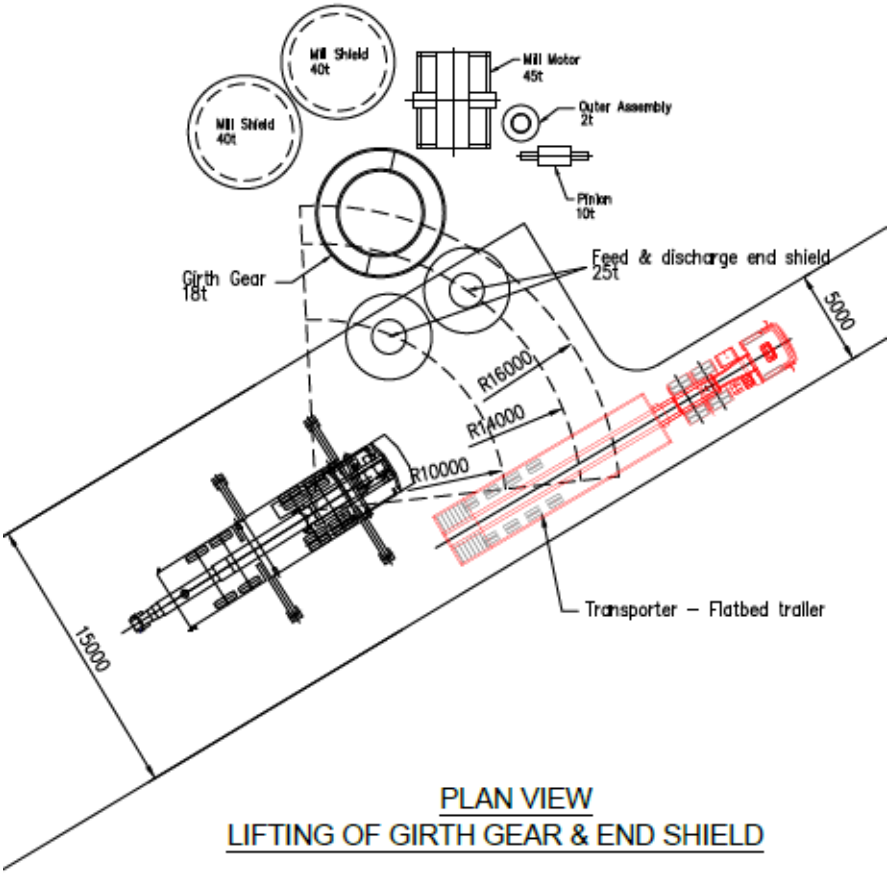

PLAN VIEW
LIFTING OF GIRTH GEAR & END SHIELD

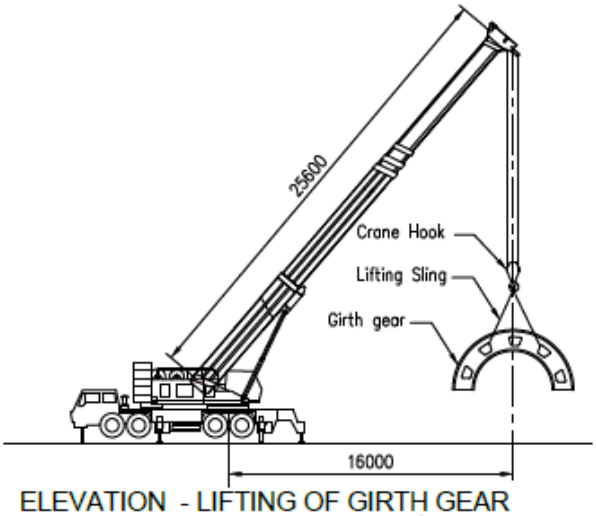

ELEVATION - LIFTING OF GIRTH GEAR

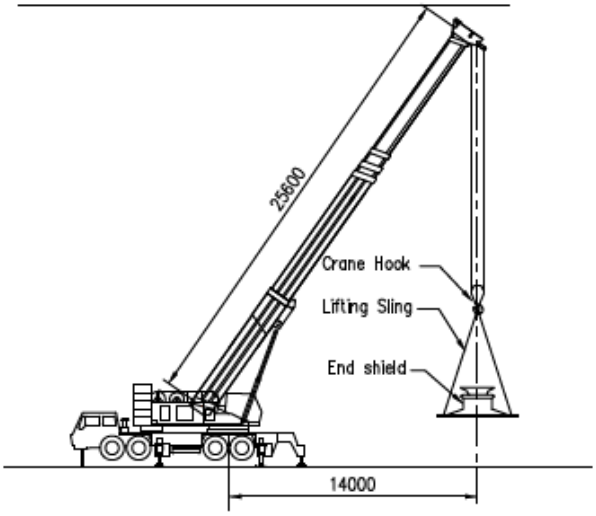

ELEVATION - LIFTING OF END SHIELD

M. Diagram of optimal lashing points

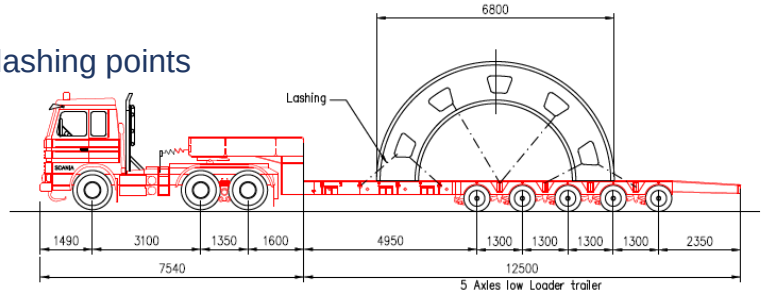

SIDE VIEW

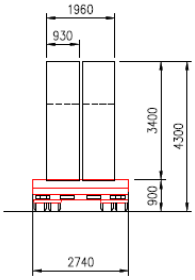

REAR VIEW

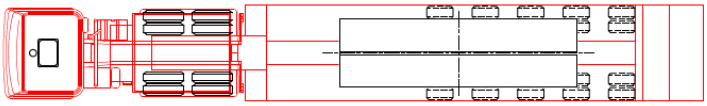

PLAN VIEW

N. Ocean Bill of Lading

EUKOR
We deliver

BILL OF LADING

FOR-PORT-TO-PORT SHIPMENT OR MULTIMODAL TRANSPORT

B/L No. EUKOMYSP1672735 (Page 1/1)

Shipper / Exporter (complete name and address)
ABLE RETURN SDN. BHD. (549631-D)
157, Jalan Bukit Bius, 27200 Kuala Lipis
Pahang Darul Makmur, MALAYSIA

Forwarding Agent - FMC Ref.

Consignee (complete name and address)
NEW ENTERPRISE TRADING (PROPRIETARY) LTD
Suite 2, Ferndale Mews (South),
15 Dover Street Randburg,Cnr Dover & Oak
Street, Randburg, Gauteng,
Johannesburg 2125, South Africa
Tel. No. +27 11 781 1602/011-781 1387

(This B/L is only drafted for the purpose of checking before original is issued.)

This B/L does not give title to the cargo, is not evidence of receipt of the cargo, nor evidence of a transport agreement.

Notify Party (complete name and address)
C STEINWEG LOGISTICS
201 SOLOMON MAHLANGU DRIVE ROSSBURGH,
4094, DURBAN, SOUTH AFRICA
AFRICA

Vessel and Voyage Agent
EUKOR Car Carriers Korea CTI LTD
2nd Floor, The Hotel Room, 7 Ilembe Crescent, La Lucia Ridge Office Estate
Umhlanga, Durban.
Tel : [redacted]
Fax : [redacted]
HK : [redacted]/2

Local Vessel	From		
Ocean Vessel: GRAND URANUS	Voyage No.: 048	Flag	Final Destination (for the shipper's reference only)
Port of Loading: PORT KELANG, MALAYSIA	Port of Discharge: DURBAN, SOUTH AFRICA		Per Transhipment to

PARTICULARS FURNISHED BY SHIPPER

Marks and Numbers	No. & Kind of packages	Description of Goods	Gross Weight	Measurement
MAFI NO. REWU1000879 WWLU4108079 WWLU4101428 CRTU4113108	4 UNITS MAFI STC 17 PACKAGES OF USED BALL MILL 16FT X 23FT, COMPONENTS USED ELECTRIC MOTOR, MITSUBISHI ELECTRIC 2500KW, 6000V, 48		239,000 KGS	446.775 CBM

FREIGHT TO COLLECT

LINE'S ROLLTRAILER (S) IS/ARE FREE OF EQUIPMENT DEMURRAGE FOR 10 DAYS AFTER DISCHARGE. AS OF THE 11TH DAY CONSIGNEE AS PER B/L WILL BE LIABLE FOR EQUIPMENT DEMURRAGE DUE TO EUKOR AMOUNTING TO USD 60,--PER DAY PER ROLLTRAILER. ANY STORAGES ON CARGO STOWED ONTO ROLLTRAILES ARE FOR THE ACCOUNT OF THE CONSIGNEE

Total Number of Packages or Units(in words): SAY : SEVENTEEN (17) UNITS ONLY.

Declared Value (Optional) : US $

[PACKAGE LIMITATION CLAUSE] Section 4 (5) of U.S. Carriage of Goods by Sea Act 1936 : Neither the carrier nor the ship shall in any event be or become liable for any loss or damage to or in connection with the transportation of goods in an amount exceeding $500 per package lawful money of the United States, or in case of goods not shipped in packages, per customary freight unit, or the equivalent of that sum in other currency, unless the nature and value of such goods have been declared by the shipper before shipment and inserted in the Bill of Lading and additional freight has been paid as required. This declaration, if embodied in the Bill of Lading, shall be prima facie evidence, but shall not be conclusive on the carrier. THIS CLAUSE SHALL APPLY ONLY TO GOODS MOVING TO OR FROM PORTS OF UNITED STATES.

Freight & Charge	Revenue Tons	Rate	Per	Prepaid	Collect

"AS ARRANGED"

Freight Prepaid at	Date of Issue	No. of Original Bs/L
Freight Payable at: DESTINATION	2020,JUL.16	THREE(3)
	LADEN ON BOARD in external apparent good order and condition unless otherwise stated. Date: 2020,JUL.16	Place of Issue: PORT KLANG EUKOR Car Carriers Inc. as Carrier (SIGNED) (M) SDN. BHD. BY: as agent to the above named Carrier

ITAC
International Trade Administration Commission of South Africa

IMPORT PERMIT NOTIFICATION

NEW ENTERPRISE TRADING (PTY) LTD
P O BOX 2339
RANDBURG
2125

Applicant Reference:	12/1/3/15/N
File number:	137528
Permit No:	IMP2020/08138
Customs Code:	20156696
Issue Date:	17/07/2020 11:02:00

Dear Sir/Madam

The import permit with details referred to hereunder was issued in your favour and electronically forwarded to SARS Customs and Excise

THIS PERMIT AUTHORISES THE ABOVE-NAMED TO IMPORT
HS Description: 1.00 Units - USED - CRUSHING OR GRINDING MACHINES
Port of Entry:
HS Code: 847420006
Conditions:
-USED CRUCHING OR GRINDING MACHINE. BEING A BALL MILL.
FROM ANY COUNTRY TO THE AMOUNT NOT EXCEEDING R 9 000 000

THIS PERMIT SHALL BE VALID FOR CLEARANCE OF GOODS FOR 12 CALENDAR MONTHS FROM THE DATE OF ISSUE.
CONDITIONS

- Only goods of the class and kind described in this permit may be imported and, except where otherwise specified, this permit is intended for the importation of new goods only.
- This permit may not be transferred in any manner by the holder thereof to any other person or used to the benefit of any person not named in the permit.
- This permit shall not absolve an importer from the obligation of also complying with the provisions of other legislation relating to the importation of goods into the Republic of South Africa.
- This permit is issued without amendments of any kind and, if any unauthorised amendment appears therein, the permit will be invalid and will be confiscated by the Commissioner: Customs and Excise.
- The importer must retain this permit for a minimum period of three calender years.

Yours faithfully

Director: Import and Export Control

The DTI Campus
(Block D)
77 Meintjies Street
Sunnyside, Pretoria
0002

Private Bag x 192
Pretoria
0001
South Africa

Tel: +27 12 394 3609
Fax: +27 12 394 0517

O. ITAC Import Permit

P. Landing Order

TRANSNET

port terminals

LANDING ORDER

Port of: Durban Terminal: SHED K/R

Account Number: 1 7 3 5 6

Signatory's Company: C Steinweg Logistics

Name of Authorised Signatory:

Agent Reference: SSI2008D0199

Tel No: 314 600 738 Fax No: Email:

1200396803
05.10.2020
Charlotte Plain MPT Car
Arrival No: 00181046
Charlotte.plain@za.steinweg.com
Telephone Number: 0027

Mark Appropriate (X)							
RAIL		ROAD	x	LINER TERMS	x	NON LINER TERMS	

Complete if applicable	
IMDG Class	

Attached											
Packing List	X	Supplier's Invoice	X	DO	X	BOL	X	SAD 500	X	BOE	X

Marks & No	No. Pkg	Description of Contents	Gross Mass (kg)	Measurement L	W	H
STATIC CARGO		BREAKBULK				
MAFI NO.		4 UNITS MAFI STC 17 PACKAGES OF USED BALL MILL 16FT X 23FT,				
REWU1000829		COMPONENTS USED ELECTRIC MOTOR, MITSUBISHI ELECTRIC				
WWLU4108829						
WWLU4101428						
CRTU4111108						
	1	FEED END SHIELD	25000	4,50	4,50	1,61
	1	DISCHARGE END SHIELD	25000	4,50	4,50	1,41
	2	GIRTH GEAR	36000	6,80	3,40	0,93
	1	PINNION	10000	3,50	1,72	1,72
	2	MILD SHELL AB	80000	5,35	5,35	1,70
	2	TRUNNION BEARING	5000	2,47	0,85	1,20
	1	AIR CLUTCH	2000	1,90	1,90	0,91
	1	DRUM CLUTCH	3000	1,30	1,30	0,91
	1	THROUT LINER	2000	1,50	1,50	0,95
	1	TRUNNER SPACER	1000	2,00	2,00	0,95
	2	HYDRAULIC LUBRICATION	2000	1,45	1,00	1,15
	1	TRUNNER LINER	2000	1,70	1,70	0,65
	1	ELECTRIC MOTOR	46000	4,35	5,10	4,30
Total Pkg (Units)	17	Total Mass (kg)	239000			

TPT Quote No:		Rail Destination	
Contract No:		Rail Siding No:	
For TPT Use Only		Cash Clients Only	
Charges Descript	Tons	Rates	Value
Loading			
Late Order			
Storage			

HARBOUR REVENUE
A Division of Transnet SOC Ltd
Reg No: 1990/000900/30
2020 -10- 05
Port of Durban
CUSTOMS STAMP
COUNTER

Transporter: K STEINWEG BRIDGE Consignee: NEW ENTERPRISE TRADING

Pre-Carrier: MORNING CORNET Voyage: 121 Port of Origin: PORT KELANG

BOE No: 5001491 BOE Date: 01/10/2020 B/L no.: EUKOMYSF1672735

IMPORTANT LEGAL NOTICE: I/We request Transnet Limited, trading as Transnet Port Terminals ("TPT") to receive (and if applicable store), and deliver the cargo referred to herein to the named consignee by the means of transport stipulated herein. I/We agree that all business undertaken and services rendered by TPT are subject to the General Terms and Conditions in the TPT Tariff Book, the TPT Standard Trading Terms and Conditions of the

Authorised Agent Signature: Date: 2/10/2020

For TPT Use Only:
Name of Reviewer: Signature: Date:

Q. Customs Worksheet

CUSTOMS WORKSHEET

FILE	SSI2009D0199	LRN	00721281DBN20200925156843	CPC	11	MRN		TRANSPORT DOC.	EUKOMYSF1672735
AGENT	00721281 C. STEINWEG LOGISTICS (PTY) LTD□201 SOLOMON MAHLANGU DRIVE□ROSSBURGH□4094□SOUTH AFRICA							ISSUED DATE	2020/07/16
IMPORTER	NEWENTJNB NEW ENTERPRISE TRADING (PROPRIETARY)LIMITED□FERNDALE□RANDBURG□2125□SOUTH AFRICA							VESSEL / FLIGHT	Morning Comet / 121
EXPORTER	ABLRETKUL ABLE RETURN SDN.BHD□MALAYSIA□000 MAKMUR□KUALA LUMPUR□MALAYSIA							HOUSE DOC.	

INVOICE NUMBER	AR20200708-01	INCOTERM	EXW	CURRENCY	USD

	VALUE	CURR.	EX. RATE (USD)	VALUE (USD)	CUMULATIVE (USD)	EX. RATE (ZAR)	VALUE (ZAR)	CUMULATIVE (ZAR)
TOTAL SUPPLIER INVOICE LINE VALUE	280000.00	USD	1.000000	280000.00	280000.00			
TOTAL FREIGHT	59730.40	USD	1.000000	59730.40	339730.40			
TOTAL INSURANCE	0.00	USD	1.000000	0.00	339730.40			
TOTAL DUTIABLE CHARGES	61214.40	USD	1.000000	61214.40	400944.80			
TOTAL NON-DUTIABLE CHARGES EXCL. FREIGHT AND INS.	0.00	USD	1.000000	0.00	400944.80			
LESS NON-DUTIABLE CHARGES				0.00	400944.80			
TOTAL CIF VALUE					400944.80	0.059414	6748321.94	
LESS FREIGHT				59730.40	341214.40			
LESS INSURANCE				0.00	341214.40			
TOTAL FOB VALUE					341214.40	0.059414	5742996.60	5742996.60
TOTAL ADJUSTED FOB VALUE								5742996.60

LINE	COO	TARIFF	PRODUCT CODE	DUTY FORMULA	B/E LINE	VALUE	DISCOUNT	FACTOR	MARKUP%	CUSTOMS VALUE	CUSTOMS DUTY	SCH 12B	TOTAL DUTY	VAT	STAT QTY	UQ
1	JP	847420	USED BALL MILL	FREE	1	280000.00	0.00	0.51070214	0.00%	5742996.60	0.00	0.00	0.00	947594.55	1.00	NO

INVOICE NUMBER	AR20200708-02	INCOTERM	EXW	CURRENCY	USD

	VALUE	CURR.	EX. RATE (USD)	VALUE (USD)	CUMULATIVE (USD)	EX. RATE (ZAR)	VALUE (ZAR)	CUMULATIVE (ZAR)
TOTAL SUPPLIER INVOICE LINE VALUE	70000.00	USD	1.000000	70000.00	70000.00			
TOTAL FREIGHT	14932.60	USD	1.000000	14932.60	84932.60			
TOTAL INSURANCE	0.00	USD	1.000000	0.00	84932.60			
TOTAL DUTIABLE CHARGES	15303.60	USD	1.000000	15303.60	100236.20			
TOTAL NON-DUTIABLE CHARGES EXCL. FREIGHT AND INS.	0.00	USD	1.000000	0.00	100236.20			
LESS NON-DUTIABLE CHARGES				0.00	100236.20			
TOTAL CIF VALUE					100236.20	0.059414	1687080.49	
LESS FREIGHT				14932.60	85303.60			
LESS INSURANCE				0.00	85303.60			
TOTAL FOB VALUE					85303.60	0.059414	1435749.15	1435749.15
TOTAL ADJUSTED FOB VALUE								1435749.15

LINE	COO	TARIFF	PRODUCT CODE	DUTY FORMULA	B/E LINE	VALUE	DISCOUNT	FACTOR	MARKUP%	CUSTOMS VALUE	CUSTOMS DUTY	SCH 12B	TOTAL DUTY	VAT	STAT QTY	UQ
1	JP	847420	USED ELEC MOTOR	FREE	2	70000.00	0.00	0.51070214	0.00%	1435749.15	0.00	0.00	0.00	236898.60	1.00	NO

ENTRY TOTALS	7178746			0.00	1184493.15

NOTES
1 - Rounded at Bill of Entry Line level

R. Photographic narrative of the operation

1. Pieces of the ball mill laying dormant in the Junkyard.

2. Crane, truck and trailer arrival at site.

3. Lifting and loading onto the trailers.


4. Identification and removal of obstructions.


5. Transport to Port Klang.

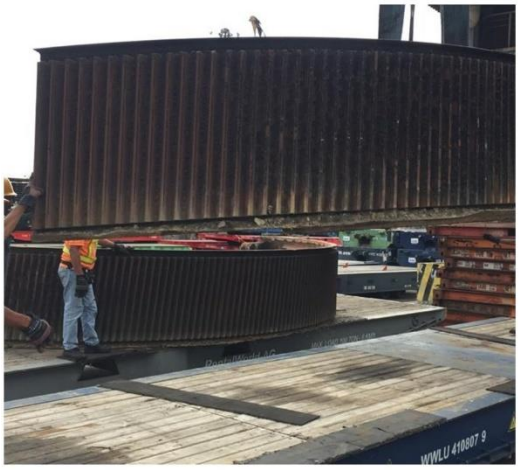
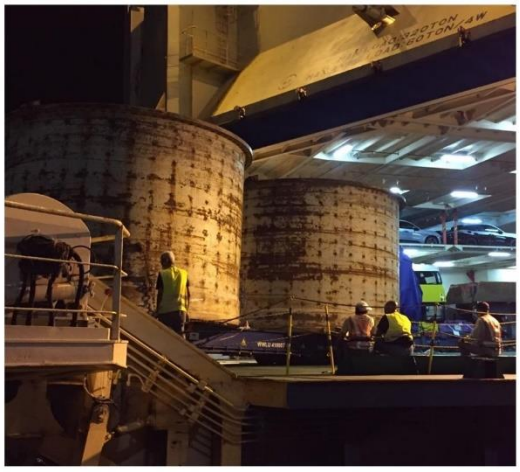

6. Transferred to MAFI trailers and loaded into the vessel.

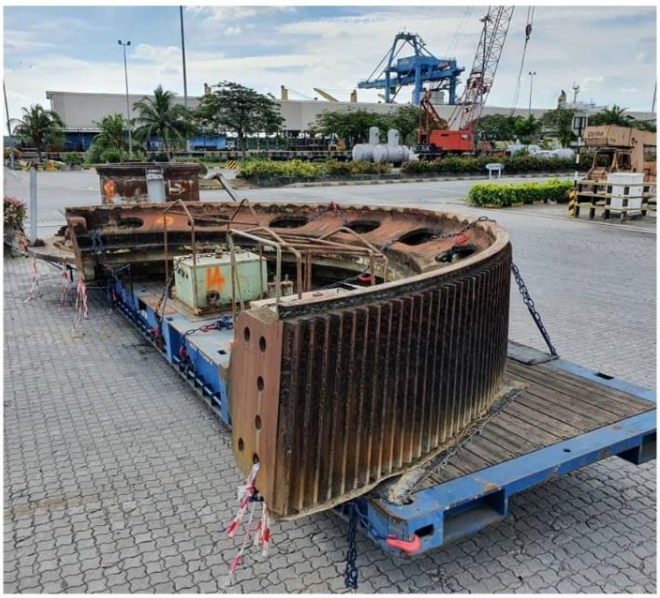

7. Arrived and unloaded in Port of Durban.

8. Arrival at the refurbishment sites.